https://doi.org/10.64211/oidaijsd191107

Barriers to the Transition from Intention to Green Consumption Behavior: An Empirical Study in Ho Chi Minh City

Pham Hai Long *[1], Than Quang Huy [2], Nguyen Thi Duc Loan [3]
[1] University of Transport Ho Chi Minh City (UTH), Vietnam.
[2,3] Faculty of Management - Law, Ba Ria - Vung Tau University, Ho Chi Minh City, Vietnam.
*Corresponding author: longph@bvu.edu.vn

© Author (s)
OIDA International Journal of Sustainable Development, Ontario International Development Agency, Canada.
ISSN 1923-6654 (print) ISSN 1923-6662 (online) www.oidaijsd.com
Deposited in SSRN repository: https://www.ssrn.com/ssrn/

Abstract: As environmental pressures mount and the shift toward sustainable development gathers pace, helping consumers translate positive environmental intentions into actual green consumption behavior has become increasingly important, particularly for advancing responsible production and consumption. Yet the persistent gap between green intention and green behavior suggests that a positive attitude and intention alone are not always enough to produce sustainable consumption. This study therefore examines the factors that shape green purchase intention and green consumption behavior, and analyzes the conditions that can either facilitate or hinder the translation of intention into actual consumer behavior in Ho Chi Minh City, Vietnam. Specifically, drawing on the Theory of Planned Behavior (TPB), the study tests the effects of attitude (ATT), subjective norm (SN), and perceived behavioral control (PBC) on green purchase intention (GPI); the effect of GPI on green consumption behavior (GCB); the mediating role of GPI; and the moderating roles of price sensitivity (PS) and green product availability (PA).

The study adopted a mixed-methods design. A preliminary qualitative phase was conducted through interviews and group discussions with 13 consumers to refine and finalize the observed variables. The quantitative phase was carried out through a face-to-face survey of consumers aged 18 and above who had lived in Ho Chi Minh City for at least six months and were involved in their household's purchasing decisions. Of the 400 questionnaires distributed, 354 valid responses were retained for analysis, corresponding to a response rate of 88.5%. The data were processed using SPSS 26.0 and AMOS 24.0. Scale reliability and construct validity were assessed through Cronbach's Alpha and confirmatory factor analysis (CFA), including standardized factor loadings, composite reliability (CR), average variance extracted (AVE), and discriminant validity, prior to structural equation modeling (SEM). A bootstrap procedure with 5,000 resamples was also used to test the indirect effects.

The empirical results show that ATT ($\beta = 0.332$), SN ($\beta = 0.280$), and PBC ($\beta = 0.426$) all have positive effects on GPI, with PBC exerting the strongest influence. In turn, GPI has a positive and statistically significant effect on GCB ($\beta = 0.642$; $p < 0.001$), and mediates the relationships between ATT, SN, PBC, and actual green consumption behavior. In addition, PS exerts a significant negative moderating effect on the GPI–GCB relationship ($\beta = -0.784$; $p < 0.001$), while PA also shows a statistically significant moderating role ($\beta = -0.095$; $p = 0.009$). These findings indicate that sustainable consumption depends not only on favorable psychological and social factors but is also shaped by economic and market conditions in the process of translating green intention into actual behavior.

The study extends the application of the TPB by incorporating mediating and moderating mechanisms, providing empirical evidence on both **the drivers of, and the challenges facing, sustainable consumption**. From a sustainable development perspective, the findings suggest that strengthening green purchase intention needs to be accompanied by measures that reduce economic

barriers and improve market conditions favorable to green choices. Accordingly, the study offers implications for businesses and policymakers seeking to promote responsible consumption and contribute to **Sustainable Development Goal 12 (SDG 12)** in Vietnam's major cities.

Keywords: Theory of Planned Behavior; green consumption; green purchase intention; price sensitivity; product availability; sustainable development; SDG 12; Ho Chi Minh City.

Introduction

The challenges of climate change, environmental pollution, and resource reduction are concerning all around the global, demanding a strong shift from traditional production and consumption models to more sustainable solutions (Ajzen, 1991; Sheeran & Webb, 2016). In this context, green consumption the prioritization of environmentally friendly products, natural-origin products, recyclable or energy-saving products is considered one of the important strategies to realize the Sustainable Development Goals (SDGs), particularly ensuring sustainable production and consumption patterns in SDG 12 (Vermeir & Verbeke, 2006; Nguyen et al., 2019). In Vietnam, consumer awareness of environmental issues has made positive progress in recent years. Movements such as “say no to plastic bags”, “green living”, and “plastic reduction” have received widespread attention and response, especially in major cities like Ho Chi Minh City one of most dynamic economic centers in Vietnam. Many consumers appear satisfy to spend extra for products with environmentally friendly brand and express supportive attitudes toward sustainable lifestyles (Chan, 2001; Tawde et al., 2023). However, a sad reality still exists: the large gap between green purchase intention and actual behavior (the intention-behavior gap) (Vermeir & Verbeke, 2006; Nguyen et al., 2019). According to Ajzen, (1991) and Chan & Lau, (2001) have pointed out that although consumers do not follow through on their stated intentions when faced with actual purchasing decisions, they often have positive attitudes and intentions to purchase green products. The causes of this discrepancy may stem from various barriers, including financial factors green products are often more expensive (price serves both as a financial sacrifice and as a quality signal) (Lichtenstein et al., 1993), market factors products are difficult to find, lacking diversity in models and types (Vermeir & Verbeke, 2006), or long-standing consumption habits. Systematically identifying and evaluating these barriers is of great significance not only for enterprises in formulating product, pricing, and distribution strategies, but also for policymakers in designing solutions to promote sustainable green lifestyles in major cities (Nguyen et al., 2019; Tawde et al., 2023). Consequently, this paper is conducted with the objectives of (1) exploring factors impacting green consumption intention and behavior based on the TPB (Ajzen, 1991; Ajzen, 1991); (2) evaluating the moderating play of two barriers which are price sensitivity and product availability on the intention-behavior gap (Lichtenstein et al., 1993; Vermeir & Verbeke, 2006); and thereby proposing appropriate managerial implications for the consumption context in Ho Chi Minh City.

Theoretical Framework and Hypotheses

Theory of planned behavior (TPB)

This study employs using the TPB model proposed by Ajzen, (1991) being the main theoretical foundation. Via the addition of perceived behavioral control, the TPB model was developed by expanding the Theory of Reasoned Action (TRA). According to the TPB model, a behavioral intention directly determines an actual behavior individual, which reflects the level of effort and willingness of that individual to perform the behavior. Behavioral intention is concurrently shaped by three independent determinants: attitude, subjective norms, and perceived behavioral control. Attitude toward behavior reflects an individual’s positive or negative evaluation of performing a particular behavior, with stronger intentions emerging when the behavior is perceived to generate beneficial outcomes. The second factor is subjective norm, representing the social pressure that individuals feel from those around them or influential groups such as family, friends, and colleagues, where the degree of support or opposition from these groups will promote or inhibit the individual's intention. The final factor is perceived behavioral control, reflecting an individual’s perception of how easy or difficult it is to perform a behavior based on available resources, such as time, money, skills, and potential barriers. Perceived behavioral control can affect behavior indirectly through behavioral intention and may also directly impact actual behavior when individuals possess sufficient resources and opportunities to perform the behavior. With logical structure and high explanatory power, the TPB model has become popular behavioral psychology models and applied in many empirical research fields to predict human behavioral trends.

The Intention-Behavior Gap in Green Consumption

Although the TPB model suggests that intention directly determines behavior, many empirical studies on green consumption have identified a significant gap between behavioral intention and actual behavior (Carrington et al., 2014; Nguyen et al., 2019). This phenomenon describes a situation in which consumers hold positive attitudes and

strong intentions toward environmental protection but do not actually purchase green products. To better explain gap in this paper finding, researchers often incorporate moderating variables that represent barriers arising from external conditions or individual perceptions. Common barriers include the high cost of green products, difficulties in accessing or finding products, limited information or trust in eco-labels, and established consumption habits that are difficult to change. Integrating these moderating variables not only helps clarify why intentions do not translate into behavior but also helps expand and enhances the explanatory power of the traditional TPB model in the context of sustainable consumption.

Research Model and Hypotheses

Impact of Attitude, Subjective Norm, and Perceived Behavioral Control on Intention

According to the TPB model developed by Ajzen (1991), the intention to perform a specific behavior is directly influenced by three main factors that are attitude, subjective norm, and perceived behavioral control. A model with high predictive value in explaining human deliberate behaviors, including consumption behavior consider this (Ajzen, 1991). When applied to the green consumption context, consumers' attitudes toward environmentally friendly products reflect their favorable or unfavorable evaluations of the value, benefits, and meaning of green purchasing (Ajzen, 1991). A person with a more positive attitude will have a greater tendency to form green purchase intentions. Previous empirical studies of Chan, (2001) and Nguyen et al., (2019) have also confirmed the positive significant relationship between attitude and green consumption intention. Additionally, subjective norm refers to the perceived social pressure that consumers feel from family, friends, colleagues, or social media (Ajzen, 1991). When those around them support and encourage a green lifestyle, consumers will have stronger motivation to form sustainable consumption intentions (Chan, 2001). This shows that subjective norm also has a significant effect on green purchase intentions. Furthermore, perceived behavioral control refers to individuals' perceptions of their capability, accessible resources (time, financial resources, and information), and opportunities to carry out a behavior (Ajzen, 1991). In the green consumption context, the easier consumers feel about accessing and purchasing green products, the stronger their intentions become (Vermeir & Verbeke, 2006). Conversely, if they encounter many difficulties or lack resources, green consumption intentions will decline. Based on the above arguments, the study proposes the following hypotheses:

H1: Attitude toward green products has a positive impact on green consumption intention.

H2: Subjective norm has a positive impact on green consumption intention.

H3: Perceived behavioral control has a positive impact on green consumption intention.

Impact of intention on green consumption behavior

The TBP model of Ajzen, (1991) affirms that behavioral intention is the immediate determinant of actual behavior. Intention reflects the degree of willingness, effort, and preparation of an individual before acting. When an individual has a higher level of commitment and determination, the likelihood of performing specific actions to achieve goals is greater. In the green consumption context, green consumption intention represents subjective plans of consumer and desires to prioritize sustainable product choices. Intention on green consumption behavior will drive consumers to seek information, be willing to pay, and perform green purchasing behavior. The empirical studies of Chan, (2001) and Nguyen et al., (2019) have confirmed the positive relationship between behavioral intention and actual behavior. Consequently, the study proposes the following hypothesis:

H4: Green consumption intention has a positive impact on green consumption behavior.

Moderating Role of Barriers on the Intention-Behavior Gap

Based on the work of Sheeran & Webb, (2016), this paper investigated that consumers may have good intentions toward environmental protection, but they may still abandon purchasing green products if faced with practical barriers. In this context, both price sensitivity and green product availability serve as moderating factors that indicate the significant relationship between intention and behavior. Specifically, when consumers have high price sensitivity, cost barriers will override environmental motivation, making them difficulty to decide green purchasing behavior. Therefore, the study proposes hypothesis following:

H5: Price sensitivity has a negative moderating effect on the relationship between green consumption intention and green consumption behavior.

Similarly, if green products are scarce or difficult to access, increased search efforts will hinder the realization of green commitments. Therefore, the study proposes:

H6: Green product availability has a negative moderating effect on the relationship between green consumption intention and green consumption behavior.

Research Model

This paper uses an extended TPB model with 3 independent variables (attitude, subjective norm, perceived behavioral control), 1 mediating variable (green consumption intention), 1 dependent variable (green consumption behavior), and 2 moderating variables (price sensitivity, green product availability). The research model is developed in Figure 1 below.

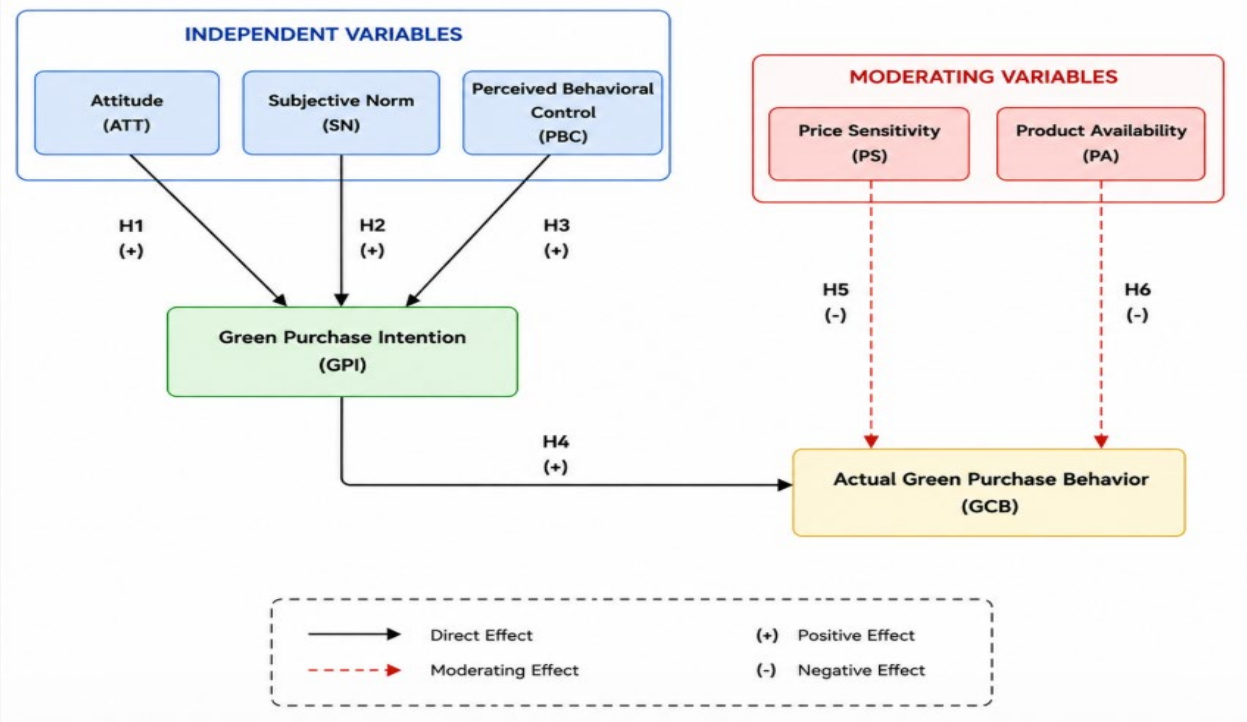

Figure 1: Proposed research model corresponding to the above hypotheses

Research Methodology

This study employed a mixed-methods design comprising a preliminary qualitative study and a formal quantitative study. The qualitative study was conducted through face-to-face interviews and group discussions with 13 consumers living in Ho Chi Minh City. Its findings yielded 26 observed variables used to measure the research constructs relating to the factors influencing green purchase intention and behavior.

The quantitative study was conducted through a face-to-face survey of consumers aged 18 and above in Ho Chi Minh City. A total of 400 questionnaires were distributed; after screening, 354 valid responses were retained for statistical analysis, corresponding to a response rate of 88.5%. Data were collected across multiple sites and districts within Ho Chi Minh City to increase the diversity of the sample.

The study used convenience sampling combined with purposive screening. Participants were selected based on the following criteria: (1) aged 18 or above; (2) had lived in Ho Chi Minh City for at least six months; and (3) were directly or jointly involved in their household's day-to-day purchasing decisions. These criteria were intended to ensure that participants had genuine shopping experience and were able to assess issues related to green product consumption. To reduce selection bias, data were collected across multiple sites and geographic areas within Ho Chi Minh City, and the same screening criteria were applied consistently to all participants. Reaching consumers across different areas helped increase the diversity of the sample and limited over-concentration on any single consumer group. Because a non-probability sampling method was used, however, selection bias could not be fully eliminated; the generalization of the findings is therefore made cautiously and confined to the population and context studied.

The study's formal measurement scales were mainly adapted from prior research, including Ajzen (1991), Vermeir and Verbeke (2006), Nguyen et al. (2019), Nguyen Hoang Sinh (2024), Chan (2001), and Lichtenstein et al. (1993), together with several observed variables developed from the findings of the preliminary qualitative study.

To mitigate potential internal biases in the collected data, the study applied both procedural and statistical safeguards. The questionnaire was designed with clear, neutral wording to minimize ambiguity and avoid leading respondents. The measurement scales were mainly adapted from prior studies and were reviewed during the qualitative phase before the formal survey was administered. The same screening criteria and data-collection procedure were applied consistently across participants to limit bias during the survey process. After collection, the data were checked and cleaned, and responses that did not meet the required standard were excluded from the analysis. The reliability and validity of the scales were assessed through Cronbach's Alpha and confirmatory factor analysis (CFA); composite reliability (CR), average variance extracted (AVE), and discriminant validity were also examined to ensure the quality of the measurement model. Together, these measures helped reduce measurement bias and response bias, thereby strengthening the reliability of the data and the resulting analysis.

After collection, the data were cleaned and processed using SPSS 26.0 and AMOS 24.0. First, scale reliability was assessed using Cronbach's Alpha; items with a corrected item-total correlation below 0.3 were removed. A scale was considered acceptable when Cronbach's Alpha ≥ 0.7.

Second, confirmatory factor analysis (CFA) was conducted in AMOS to assess the fit of the measurement model and its construct validity. Construct validity was established through convergent validity and discriminant validity. Convergent validity was assessed based on standardized factor loadings, composite reliability (CR), and average variance extracted (AVE). Standardized factor loadings meeting the required threshold, together with CR and AVE values above the acceptable cut-offs, provided evidence of the convergent validity of the scales.

Discriminant validity was assessed using AVE, Maximum Shared Variance (MSV), and the Fornell–Larcker criterion. Discriminant validity was confirmed when the AVE of each construct exceeded its corresponding MSV and the square root of the AVE exceeded the correlations between that construct and the others. Together with the CFA model-fit indices, the results for convergent and discriminant validity were used to confirm the construct validity of the measurement model before proceeding to test the structural model.

Third, structural equation modeling (SEM) was used to test the direct effects (H1, H2, H3, H4). The mediating role of GPI was tested using a bootstrap procedure with 5,000 resamples and 95% bias-corrected confidence intervals. An indirect effect was considered statistically significant when its 95% bootstrap confidence interval did not include zero.

For the moderating effects (H5, H6), the variables were standardized (Z-scores) and interaction terms (GPI × PS and GPI × PA) were created and entered into the SEM to reduce multicollinearity. A moderating effect was confirmed when the path coefficient of the interaction term was statistically significant ($p < 0.05$).

The official research scales are presented in Table 1 below.

Table 1: Official Research Scales

Code	Question Content	Source
1. Attitude (AT)		
ATT1	Green product consumption is a smart and positive choice.	Based on TPB theory (Ajzen, 1991) and references Chan (2001), Nguyen et al. (2019)
ATT2	Buying green products brings many benefits to the environment and human health.	
ATT3	I have a positive attitude toward buying and using green products.	
ATT4	Green products usually have better quality than conventional products.	
2. Subjective Norm (SN)		
SN1	My family members think I should buy green products.	Based on TPB theory (Ajzen, 1991; Taylor & Todd, 1995) and Chan (2001)
SN2	My friends often encourage me to buy green products.	
SN3	Important people to me want me to consume green.	
SN4	On social media, I often see people around me supporting and sharing about green products.	
3. Perceived Behavioral Control (PBC)		
PBC1	Buying green products is easy for me.	

PBC2	I have sufficient financial ability to buy green products.	Based on Ajzen (1991); Vermeir & Verbeke (2006)
PBC3	I have the time and necessary conditions to search for green products.	
PBC4	Nothing prevents me from buying green products if I really want to.	
4. Green Purchase Intention (GPI)		
GPI1	In the next 6 months, I intend to buy more green products than currently.	Based on Ajzen (1991); Chan (2001); Nguyen et al. (2019)
GPI2	I am willing to buy green products instead of conventional products.	
GPI3	I will prioritize choosing green products when there is a need to use them.	
GPI4	I have a strong intention to buy environmentally friendly products.	
5. Actual Green Consumption Behavior (GCB)		
GCB1	In the past 6 months, I have bought quite a few green products.	Nguyen et al. (2019); self-developed
GCB2	I regularly choose to buy products with green, organic, or recyclable labels.	
GCB3	My recent shopping behavior is oriented toward environmental protection.	
6. Price Sensitivity (PS)		
PS1	The price of green products is usually too high compared to my ability to pay.	References Lichtenstein et al. (1993); Sharma & Bansal (2022)
PS2	I am very sensitive to the price difference between green and conventional products.	
PS3	If green products are much more expensive, I will not buy them.	
PS4	Price is the most important factor when I decide to buy green products.	
7. Product Availability (PA)		
PA1	I can easily find and buy green products at supermarkets near my home.	Vermeir & Verbeke (2006); self-developed
PA2	There are many green product choices at places where I usually shop.	
PA3	I often have to search online or go far to buy green products.	

Source: Authors' research results, 2026

Research Results

Research Sample

The study subjects were consumers who had known about or been interested in green products aged 18 to 50 in Ho Chi Minh City. The study collected 354 valid samples out of 400 distributed questionnaires were used for analysis. Samples were collected using stratified convenience sampling through online and direct methods at supermarkets and shopping centers across districts and some suburban areas of HCMC, during the period from March to April 2025. Descriptive statistics of respondents are shown in Table 2.

Table 2: Descriptive Statistics of Research Sample

Characteristic	Group	Frequency	Percentage (%)
Gender	Male	138	39.0
	Female	216	61.0
Age	18 – 25	162	45.8
	26 – 35	118	33.3
	36 – 50	74	20.9
Monthly Income	Under 15 million VND	115	32.5
	15 – 25 million VND	148	41.8
	Over 25 million VND	91	25.7
Education Level	High school and below	58	16.4
	College / University	231	65.3
	Postgraduate	65	18.4

Source: Authors' survey data, 2026

Scale Evaluation

To assess the reliability and construct validity of the scales, the study used Cronbach's Alpha, standardized factor loadings, composite reliability (CR), and average variance extracted (AVE). Convergent validity was assessed through the factor loadings, CR, and AVE, while discriminant validity was tested using MSV and the Fornell–Larcker criterion.

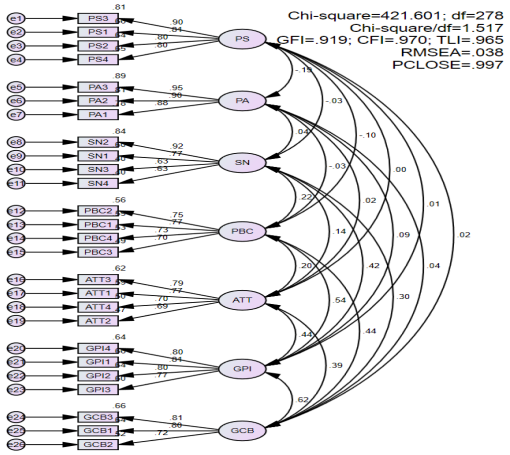

Figure 2. Confirmatory factor analysis (CFA) results for the measurement model

Source: Authors' data analysis using AMOS

The CFA results indicate a good fit between the measurement model and the data, with $\chi^2/df = 1.517$, GFI = 0.919, CFI = 0.970, TLI = 0.965, RMSEA = 0.038, and PCLOSE = 0.997. The standardized factor loadings of the observed variables ranged from 0.631 to 0.945, all above 0.50, indicating that the observed variables adequately represent their corresponding latent constructs.

Table 3: Reliability and Standardized Factor Loading Results of the Scales

Factor	Observed Variable	Standardized Factor Loading	Cronbach's Alpha	Assessment
Attitude (ATT)	ATT1	0.769	0.825	Acceptable
	ATT2	0.686		
	ATT3	0.789		
	ATT4	0.704		
Subjective Norm (SN)	SN1	0.774	0.829	Acceptable
	SN2	0.916		
	SN3	0.631		
	SN4	0.631		
Perceived Behavioral Control (PBC)	PBC1	0.769	0.826	Acceptable
	PBC2	0.751		
	PBC3	0.703		
	PBC4	0.727		
Green Purchase Intention (GPI)	GPI1	0.812	0.873	Acceptable
	GPI2	0.800		
	GPI3	0.772		
	GPI4	0,800		
Green Consumption Behavior (GCB)	GCB1	0.801	0.821	Acceptable

	GCB2	0.722		
	GCB3	0.813		
Price Sensitivity (PS)	PS1	0.813	0.985	Acceptable
	PS2	0.801		
	PS3	0.900		
	PS4	0.803		
Green Product Availability (PA)	PA1	0.882	0.935	Acceptable
	PA2	0.902		
	PA3	0.945		

Source: Authors' data analysis using SPSS and AMOS

The results in Table 3 show that the standardized factor loadings of the observed variables all exceed 0.50, ranging from 0.631 to 0.945, indicating that the items adequately represent their corresponding latent constructs. In addition, the Cronbach's Alpha values for all scales reached an acceptable level, confirming their internal reliability. Building on these results, the convergent and discriminant validity of the measurement model were further assessed using CR, AVE, MSV, and the Fornell–Larcker criterion, as presented in Table 4.

Table 4: Convergent and Discriminant Validity Results of the Scales

Construct	CR	AVE	MSV	PS	PA	SN	PBC	ATT	GPI	GCB
PS	0.899	0.689	0.037	**0.830**						
PA	0.935	0.828	0.037	-0.192	**0.910**					
SN	0.832	0.559	0.173	-0.035	0.038	**0.748**				
PBC	0.827	0.545	0.296	-0.105	-0.026	0.225	**0.738**			
ATT	0.827	0.545	0.197	0.003	0.020	0.136	0.202	0**.738**		
GPI	0.874	0.634	0.387	0.013	0.093	0.416	0.544	0.444	**0.796**	
GCB	0.823	0.608	0.387	0.021	0.044	0.297	0.441	0.388	0.622	**0.780**

Source: Authors' data analysis using AMOS

The results show that the CR values of the scales ranged from 0.823 to 0.935, all above 0.70, while the AVE values ranged from 0.545 to 0.828, all above 0.50, confirming the convergent validity of the scales. In addition, the AVE of each construct exceeded its corresponding MSV. Under the Fornell–Larcker criterion, the square root of the AVE for each construct exceeded its correlations with the other constructs, confirming discriminant validity. These results provide evidence of the reliability, convergent validity, and discriminant validity of the measurement model, thereby supporting its construct validity.

4.3. Structural Model Evaluation

Bảng 5. Các chỉ số đánh giá độ phù hợp của mô hình cấu trúc

	Value	Acceptable Threshold
χ^2/df	1.712	< 3
CFI	0.966	> 0.90
TLI	0.959	> 0.90
GFI	0.934	≥ 0.9
RMSEA	0.045	< 0.08

Source: Authors' data analysis using AMOS.

The results in Table 5 show that the structural model fits the observed data well. Specifically, $\chi^2/df = 1.712$, below the threshold of 3; CFI = 0.966, TLI = 0.959, and GFI = 0.934, all above the 0.90 threshold; and RMSEA = 0.045, below the 0.08 threshold. All model-fit indices therefore meet the recommended criteria, confirming that the structural model is suitable for testing the research hypotheses.

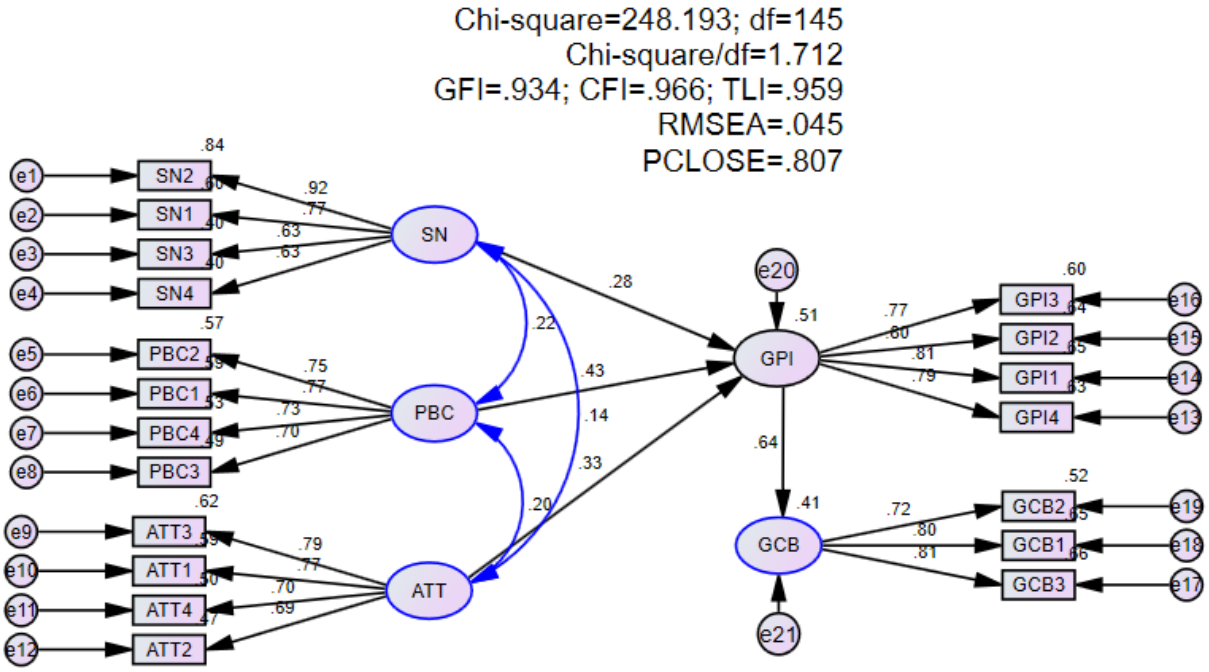

Figure 3. Structural Equation Modeling (SEM) Results

Source: Authors' data analysis using AMOS

After ensuring the measurement model achieves reliability and convergent validity, the paper proceeds to test hypotheses about causal relationships between concepts using SEM model. Detailed test results are presented in Table 6.

The results show that attitude (ATT) has a positive effect on green purchase intention ($\beta = 0.332$, $p < 0.001$), so Hypothesis H1 is supported. This means that the more positive a consumer's attitude toward green products, the stronger their intention to purchase environmentally friendly products.

Similarly, subjective norm (SN) also has a positive effect on green purchase intention ($\beta = 0.280$, $p < 0.001$), so Hypothesis H2 is supported. This finding indicates that social pressure from family, friends, and the community plays an important role in shaping consumers' intention to purchase green products.

In addition, perceived behavioral control (PBC) has the strongest positive effect on green purchase intention ($\beta = 0.426$, $p < 0.001$), so Hypothesis H3 is supported. This indicates that when consumers feel they have sufficient financial resources, time, and favorable conditions to purchase green products, their intention is considerably strengthened.

Finally, green purchase intention (GPI) has a positive effect on actual green consumption behavior ($\beta = 0.642$, $p < 0.001$), so Hypothesis H4 is supported. This result confirms that intention is a direct and important antecedent of behavior, consistent with Ajzen's (1991) Theory of Planned Behavior.

Table 6: Research Hypothesis Test Results

Hypothesis	Relationship	Expected	Standardized Coefficient	p-value	Result
H1	GPI <--- AT	+	.332	***	Accepted
H2	GPI <--- SN	+	.280	***	Accepted
H3	GPI <--- PBC	+	.426	***	Accepted
H4	GCB <--- GPI	+	.642	***	Accepted

Source: Authors' data analysis using AMOS

From the above analyses, the authors can conclude that the theoretical model fits the research data and 04 research hypotheses are accepted.

Table 7. Bootstrap Test Results for the Mediating Role of GPI

Indirect Relationship	Standardized Indirect Effect (β)	Lower BC 95% CI	Upper BC 95% CI	Result
ATT → GPI → GCB	0,213	0,144	0,288	Mediation confirmed
SN → GPI → GCB	0,180	0,120	0,246	Mediation confirmed
PBC → GPI → GCB	0,274	0,197	0,352	Mediation confirmed

Note: Bootstrap = 5,000 resamples; BC = Bias-Corrected; CI = Confidence Interval.

Source: Authors' data analysis using AMOS.

Moderation Test

To test the moderating roles of price sensitivity (PS) and green product availability (PA) on the relationship between green purchase intention (GPI) and green consumption behavior (GCB), the study standardized the variables into Z-scores. In the moderation model, MD1 represents the standardized price sensitivity (PS) variable, and MD2 represents the standardized green product availability (PA) variable. Two interaction terms were then constructed: ZINT1 (GPI × PS) and ZINT2 (GPI × PA). These interaction terms, together with their component variables, were entered into the SEM to assess how the effect of GPI on GCB changes under the influence of PS and PA.

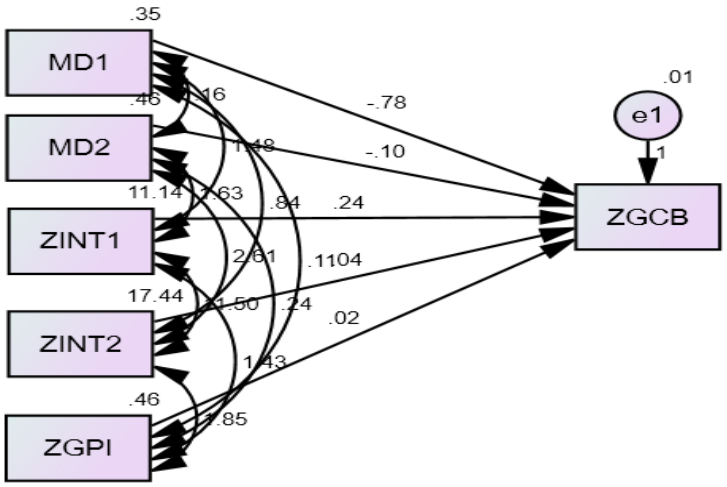

Figure 4. Structural model with moderating variables

Source: Authors' data analysis using AMOS

Detailed analysis results presented in Table 8 show:

Moderating effect of Price Sensitivity (PS): The interaction variable ZINT1 (GPI × PS) has a regression coefficient of β = -0.784 and is statistically significant at p < 0.001. his result indicates that price sensitivity negatively moderates the relationship between intention and green consumption behavior by weakening the effect of intention on behavior. In other hand, when consumers are more price-sensitive, the impact of intention on behavior becomes weaker.

Moderating effect of Green Product Availability (PA): The regression coefficient of the interaction variable ZINT2 (GPI × PA) is β = -0.095 with significance level p = 0.009 (< 0.05). This result shows that product availability also has a negative moderating impact (weakens) on the relationship between intention and green consumption behavior. Specifically, when green products are more difficult to find lower availability, the impact of intention on behavior becomes weaker.

Table 8: Moderation Test Results

Interaction Variable	Relationship	Standardized Coefficient (β)	p-value	Result
ZINT1 (GPI × PS)	Moderates GPI → GCB	-0.784	***	H5 Accepted
ZINT2 (GPI × PA)	Moderates GPI → GCB	-0.095	0.009	H6 Accepted

Source: Authors' data analysis using AMOS.

From the above results, both hypotheses H5 and H6 are accepted, confirming that both price sensitivity and green product availability are barriers that weaken the relationship between intention and green consumption behavior.

Conclusions And Managerial Implications

Impact of Attitude, Subjective Norm, and Perceived Behavioral Control on Green Consumption Intention

The findings show that all three factors — attitude (ATT), subjective norm (SN), and perceived behavioral control (PBC) — have positive effects on green purchase intention (GPI), consistent with Ajzen's (1991) Theory of Planned Behavior. Notably, perceived behavioral control (PBC) has the strongest effect (β = 0.426), higher than attitude (β = 0.332) and subjective norm (β = 0.280). This indicates that, in the context of green consumption in Ho Chi Minh City, consumers' perception that they have the ability and the necessary conditions to perform the behavior plays a particularly important role in forming green purchase intention. This finding echoes Vermeir and Verbeke's (2006) observations on the role of enabling conditions in sustainable consumption, and indicates that, in this study's context, PBC is a stronger predictor than ATT and SN.

From a sustainable development perspective, this finding suggests that promoting green consumption cannot rely on raising awareness or building positive attitudes alone, but also requires creating practical conditions that enable consumers to make green choices. In particular, the strong effect of PBC implies that businesses and regulators should focus on reducing obstacles in the process of selecting and purchasing green products, while providing clear and accessible information on their environmental attributes and benefits. In addition, communication, education, and community programs can help reinforce positive attitudes and social norms toward green consumption. Combining greater awareness, positive social influence, and improved behavioral conditions can help strengthen green purchase intention, laying the groundwork for promoting sustainable consumption patterns.

Impact from Intention to Behavior

The findings show that green purchase intention (GPI) has a positive and statistically significant effect on green consumption behavior (GCB) (β = 0.642; p < 0.001). This result confirms that as green purchase intention increases, so does the likelihood of engaging in actual green consumption behavior, consistent with Ajzen's (1991) Theory of Planned Behavior. However, the magnitude of this effect also indicates that forming a positive intention is an important, but not the sole, determinant of actual behavior.

Beyond the direct effect of GPI on GCB, the bootstrap results with 5,000 resamples confirm the mediating role of GPI in the relationships between ATT, SN, PBC, and GCB. Specifically, the indirect effects of ATT, SN, and PBC on GCB through GPI were all statistically significant, as their 95% bootstrap confidence intervals did not include zero. This finding indicates that GPI functions as an important transformation mechanism through which attitude, social influence, and perceived behavioral control are converted into actual green consumption behavior.

From a sustainable development perspective, this finding clarifies an important mechanism in promoting responsible consumption: psychological and social factors first shape intention, which in turn drives actual behavior. Achieving sustainable development goals at the consumer level therefore requires programs and policies that go beyond raising awareness and also create the conditions for intention to be translated into action. Businesses can support this process by providing transparent information, simplifying the identification and selection of green products, and creating a more convenient shopping experience. Such measures can help promote responsible consumption behavior and support the implementation of SDG 12 on sustainable production and consumption.

Moderating Role of Price Sensitivity and Product Availability

The findings show that price sensitivity (PS) and green product availability (PA) play statistically significant moderating roles in the relationship between green purchase intention and behavior. Specifically, the interaction coefficient between GPI and PS was $\beta = -0.784$ ($p < 0.001$), indicating that price sensitivity weakens the relationship between intention and behavior. This means that even when consumers hold a positive intention toward green products, a high level of price sensitivity can still reduce the likelihood of that intention being translated into actual behavior. This result is consistent with Lichtenstein et al. (1993) and Tawde et al. (2023), confirming that economic factors remain an important condition in green consumption decisions.

For green product availability (PA), the GPI × PA interaction term had a coefficient of $\beta = -0.095$ ($p = 0.009$), indicating that PA also plays a statistically significant moderating role in the relationship between intention and behavior. Although its moderating effect is weaker than that of PS, the finding suggests that accessibility and the market presence of green products should also be considered when explaining the translation of intention into green consumption behavior.

From a sustainable development perspective, these two findings point to real challenges in converting green intention into green behavior. In particular, price sensitivity shows that cost can be a significant barrier even for consumers who already hold a green purchase intention. To address this challenge, businesses can optimize costs, diversify price points and product specifications, and better communicate the long-term value and environmental benefits of green products. Regulators may consider policies that support sustainable production and distribution to help improve the competitiveness of green products.

At the same time, the findings related to PA imply that access to green products also needs to be improved. Businesses and retail systems can expand their distribution networks, increase coverage at points of sale, and help consumers more easily identify green products. Addressing both economic barriers and accessibility conditions together can create a more favorable environment for translating intention into behavior, thereby helping to promote sustainable consumption in the long run.

To mitigate potential internal biases in the data, the study applied a combination of control measures throughout the data collection and analysis process. The questionnaire relied on scales mainly adapted from prior studies, worded clearly and neutrally. Participants were informed that participation was entirely voluntary and that the information collected would remain anonymous, which encouraged honest responses and limited social-desirability bias. Consistent screening criteria were applied prior to the survey, and invalid responses were removed during data cleaning. Statistically, the reliability and validity of the scales were assessed through Cronbach's Alpha, CFA, CR, AVE, and discriminant validity before proceeding to SEM. The SEM results confirmed the main hypothesized relationships; in addition, bootstrapping with 5,000 resamples provided further evidence for the mediating role of GPI, and the interaction-term tests confirmed the moderating roles of PS and PA. The study's conclusions are therefore drawn from consistent findings across the measurement model, the structural model, and the supplementary tests. Nevertheless, because the data are self-reported and were collected through non-probability sampling, potential biases cannot be entirely ruled out; the findings should therefore be generalized cautiously and within the population and context studied.

Contributions, Challenges, and Implications for Sustainable Development

Overall, this study extends understanding of sustainable development by clarifying the mechanism through which green consumption behavior is formed and enacted in the context of Ho Chi Minh City. The findings show that sustainable consumption depends not only on individuals' positive attitudes but also on the interaction among psychological factors, social factors, perceived behavioral control, and economic-market conditions. ATT, SN, and PBC jointly shape GPI, while GPI plays a critical role in converting these factors into GCB. An important contribution of the study is therefore to show that sustainable development goals at the consumer level need to be approached as a

process running from awareness and enabling conditions → intention → actual behavior, rather than focusing solely on a positive attitude toward the environment.

At the same time, the results for PS and PA show that this process faces economic and market-related challenges. Promoting sustainable development therefore requires combining changes in consumer awareness and behavior with improvements to the market environment for green consumption. Businesses need to work on price competitiveness, product diversification, expanding distribution networks, and providing transparent information about the environmental attributes of their products. Regulators can help by adopting policies that encourage green production and distribution, supporting communication and education on sustainable consumption, and making green choices more accessible. Coordination among consumers, businesses, and regulators can help reduce the barriers in translating intention into behavior, thereby supporting SDG 12 and long-term sustainable development goals.

Limitations and Directions for Future Research

One notable finding is that PBC has a stronger effect than ATT and SN, whereas several prior studies have emphasized attitude as the leading predictor of green purchase intention. This difference may be related to the economic, social, and market characteristics of the Ho Chi Minh City context, where the ability to perform the behavior and the presence of enabling conditions may play a particularly important role in green consumption decisions. Rather than viewing this as an outright contradiction of earlier studies, the results suggest that the relative importance of the TPB components may vary depending on the research context. This also indicates that sustainable development policies should be tailored to the conditions of each market rather than applying a uniform approach.

The study is not without limitations. The sample was collected through non-probability sampling and confined to Ho Chi Minh City, which limits the generalizability of the findings to Vietnamese consumers as a whole. In addition, self-reported data may be subject to response bias and may not fully reflect actual purchasing behavior. Future research could extend the survey to other localities, use probability sampling methods, and adopt a longitudinal design to examine the stability of these relationships over time. Combining survey data with actual purchase data could also help provide a more accurate assessment of the intention–behavior gap. In addition, future studies could extend the model by considering trust in eco-labels, awareness of greenwashing, the price premium of green products, supportive policies, and green distribution infrastructure. These research directions could help identify a fuller set of conditions that facilitate or hinder green consumption, thereby providing stronger evidence for developing sustainable development solutions.

References

Aiken, L. S., & West, S. G. (1991). Multiple regression: Testing and interpreting interactions. Sage Publications.

Ajzen, I. (1985). From intentions to actions: A theory of planned behavior. In J. Kuhl & J. Beckmann (Eds.), Action control: From cognition to behavior (pp. 11–39). Springer.

Ajzen, I. (1991). The theory of planned behavior. Organizational Behavior and Human Decision Processes, 50 (2), 179–211. https://doi.org/10.1016/0749-5978(91)90020-T

Byrne, B. M. (2016). Structural equation modeling with AMOS: Basic concepts, applications, and programming (3rd ed.). Routledge.

Chan, R. Y. K. (2001). Determinants of Chinese consumers' green purchase behavior. Psychology & Marketing, 18 (4), 389–413. https://doi.org/10.1002/mar.1013

Collier, J. E. (2020). Applied structural equation modeling using AMOS: Basic to advanced techniques. Routledge.

Fishbein, M., & Ajzen, I. (1975). Belief, attitude, intention, and behavior: An introduction to theory and research. Addison-Wesley.

Fornell, C., & Larcker, D. F. (1981). Evaluating structural equation models with unobservable variables and measurement error. Journal of Marketing Research, 18 (1), 39–50. https://doi.org/10.1177/002224378101800104

Garson, G. D. (2016). Partial least squares: Regression and structural equation models. Statistical Associates Publishers.

Hair, J. F., Black, W. C., Babin, B. J., & Anderson, R. E. (2014). Multivariate data analysis (7th ed.). Pearson Education.

Hair, J. F., Black, W. C., Babin, B. J., & Anderson, R. E. (2019). Multivariate data analysis (8th ed.). Cengage Learning

Henseler, J., Ringle, C. M., & Sarstedt, M. (2015). A new criterion for assessing discriminant validity in variance-based structural equation modeling. Journal of the Academy of Marketing Science, 43 (1), 115–135. https://doi.org/10.1007/s11747-014-0403-8

Lichtenstein, D. R., Ridgway, N. M., & Netemeyer, R. G. (1993). Price perceptions and consumer shopping behavior: A field study. Journal of Marketing Research, 30 (2), 234–245. https://doi.org/10.1177/002224379303000206

Nguyen, H. V., Nguyen, C. H., & Hoang, T. T. B. (2019). Green consumption: Closing the intention-behavior gap. Sustainable Development, 27 (1), 118–129. https://doi.org/10.1002/sd.1875

Nguyen Hoang Sinh. (2024). Exploring green consumption intention-behavior gap in Vietnam: An extended TPB approach. Journal of System and Management Sciences, 14 (4), 215–233.

Sheeran, P., & Webb, T. L. (2016). The intention–behavior gap. Social and Personality Psychology Compass, 10 (9), 503–518. https://doi.org/10.1111/spc3.12265

Tawde, S., Kamath, R., & ShabbirHusain, R. V. (2023). 'Mind will not mind' – Decoding consumers' green intention-green purchase behavior gap via moderated mediation effects of implementation intentions and self-efficacy. Journal of Cleaner Production, 135506. https://doi.org/10.1016/j.jclepro.2023.135506

Taylor, S., & Todd, P. (1995). Decomposition and crossover effects in the theory of planned behavior: A study of consumer adoption intentions. International Journal of Research in Marketing, 12 (2), 137–155. https://doi.org/10.1016/0167-8116(95)00001-9

Vermeir, I., & Verbeke, W. (2006). Sustainable food consumption: Exploring the consumer "attitude–behavioral intention" gap. Journal of Agricultural and Environmental Ethics, 19 (2), 169–194. https://doi.org/10.1007/s10806-005-5485-3

About the Authors

1. Loan Nguyen Thi Duc
Faculty of Management - Law, Ba Ria - Vung Tau University, Vietnam.
Email: loanntd@bvu.edu.vn
Position: Vice Dean
Research Areas:
Management Control Systems (MCS): Design and implementation of performance measurement tools, including Key Performance Indicators (KPIs) and the Balanced Scorecard, in agile or uncertain business environments. Sustainability Reporting and ESG Integration: Non-financial disclosure of Environmental, Social, and Governance (ESG) information; the impact of ESG on firm value and investors' capital allocation decisions. International Financial Reporting Standards (IFRS): The impact of IFRS convergence or adoption on the transparency and comparability of financial reporting in emerging markets.

2. Quang Huy Than
Faculty of Management - Law, Ba Ria - Vung Tau University, Vietnam
Email: chientd@dhv.edu.vn
Position: Lecturer, Finance Department, Faculty of Business Administration and Law, Ba Ria–Vung Tau University (BVU)

Research Areas:Behavioral Finance, Financial Technology (FinTech) and AI Applications, Sustainable Finance (ESG & Green Finance), Digital Consumer Behavior, Sustainable and Green Consumptiona, Human-AI Interaction and Automation, Personal Financial Behavior, Digital Financial Services Adoption

3. Long Hai Pham
Postgraduate Education Institute, Ba Ria - Vung Tau University (BVU), Vietnam
Email: phamhailong300683@gmail.com

Dr. Pham is a researcher in economics and finance. His current research interests span several interconnected areas: international monetary and financial systems, digital finance and mobile money, innovation-driven entrepreneurship, and brand management and development. This diverse research portfolio reflects his engagement with both macro-level financial structures and emerging trends in financial technology and business innovation.

His recent scholarly work examines the adoption and postponement of mobile money services among urban residents in Vietnam, contributing empirical insight into the behavioral and structural factors shaping digital financial inclusion in emerging markets. This line of research situates Dr. Pham within the broader academic conversation on financial technology adoption, consumer behavior, and the evolving digital finance landscape in Southeast Asia.

Through his combined roles as educator, researcher, and academic administrator, Dr. Pham bridges scholarly inquiry with institutional leadership in postgraduate education, supporting the development of research capacity in economics, finance, and business administration at BVU.

Presenter Introduction (Submission Form, Section M - maximum 50 words)

Dr. Nguyen Thi Duc Loan, Mr. Than Quang Huy, and Dr. Pham Hai Long are researchers and academics at Ba Ria–Vung Tau University, Vietnam. Their research interests include management control, ESG, IFRS, behavioral finance, FinTech, AI, digital finance, mobile money, sustainable consumption, entrepreneurship, and financial innovation.

Presenter: Hai Long Pham .